Introduction to Electrical Engineering

Experiment 5 **Superposition Principle** **Spring 2019**

The objective of this experiment is to learn how Superposition Principle can simplify the analysis of linear circuits. We will use two independent d-c voltage sources and one independent a-c source in this experiment.

1. Connect the +5V (V_{D1}), –15V (V_{D2}) and COM (***Gnd***) terminals of the D-C Power Supply to the RED, BLUE and BLACK BUSES respectively on the breadboard. Adjust the D-C Power Supply to give V_{D1} = **+ 4.8V** and V_{D2} = **– 3.0V**. Bring the WAVEGEN output to a convenient point on the breadboard, with the WAVEGEN Gnd wire connected to the BLACK BUS on the breadboard. Set the WAVEGEN to give a 1-kHz sinusoidal output voltage v_a having a peak-to-peak value **3.6V** and no offset.
2. Using R_1 = 30kΩ and R_2 = 10kΩ, assemble the Circuit under test, indicated in the broken rectangle in **Fig. 5.1**, on the breadboard. In this experiment, each of the three points ***A***, ***B*** and ***C*** of the circuit under test will have to be connected **either** to **Gnd** or to the respective source (v_a, V_{D1}, V_{D2}). This will be done with the help of three short **jumper** wires, one for each of the points ***A***, ***B***, ***C***. As shown in **Fig. 5.1**, one end of each **jumper** wire will remain connected to the corresponding point ***A***, ***B*** or ***C***, while the other end will be connected **either** to ***Gnd*** or to the respective source (v_a, V_{D1}, V_{D2}) just by moving the other end of the wire.

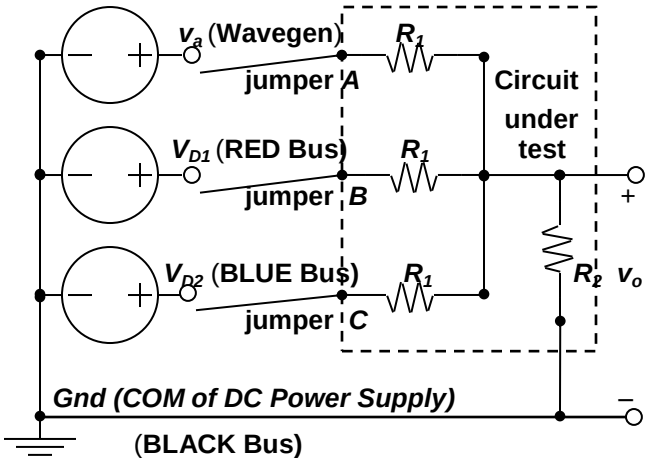

Fig. 5.1 Circuit with Three Independent Voltage Sources

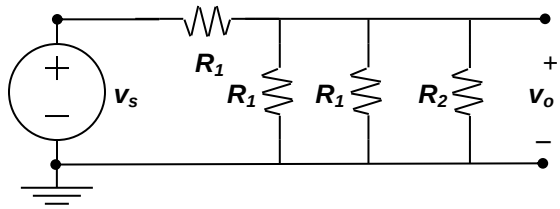

Fig. 5.2 Equivalent Circuit for one Source

3. Superposition Principle says that the response of the circuit of **Fig. 5.1** to the three sources v_a, V_{D1} and V_{D2} acting together is given by the algebraic sum of the responses obtained from three separate circuits obtained by keeping only one of the three sources and replacing the other two voltage sources by wires (**short circuit**). Note that the circuit with only one of the three sources has the equivalent circuit given in **Fig. 5.2**, v_s representing the chosen voltage source out of the three sources v_a, V_{D1} and V_{D2}. Verify by theoretical analysis that $v_o = v_s / 6$, so that the individual contributions of the three sources to the output voltage are given by $v_a / 6$, $V_{D1} / 6$ = 0.8V and $V_{D2} / 6$ = – 0.5V.
4. Connect ***A***, ***B***, ***C*** to v_a, V_{D1}, V_{D2} by placing the **jumper** wires appropriately. The output voltage v_o is now due to all the three inputs applied together. Display the WAVEGEN output v_a and the output voltage v_o of the circuit on two channels of the DSO, and set up the DSO for automatic **measurement** of the **minimum** and **maximum** voltage levels of **both** the waveforms. **Adjust the WAVEGEN** controls to ensure that the **minimum** and **maximum** values of v_a are **exactly + 4.8V** and **– 3.0V**. Note down the **minimum** and **maximum** values of v_o. Sketch the waveform of v_o, indicating its minimum and maximum levels.
5. Leaving ***A*** connected to v_a, move the **jumper** wires at ***B*** and ***C*** so as to disconnect them from V_{D1} and V_{D2} (RED and BLUE busses), and connect them to ***Gnd***. This replaces the sources V_{D1} and V_{D2} by short-circuits. Note the **minimum** and **maximum** voltage levels of v_{oa}, due to v_a alone.
6. Disconnect ***A*** from v_a and connect it to ***Gnd***, thereby replacing v_a by a short-circuit. Disconnect ***B*** from ***Gnd*** and connect it to V_{D1}. Note the resulting d-c output voltage v_{o1}, due to V_{D1} alone.
7. With ***A*** remaining connected to ***Gnd***, disconnect ***B*** from V_{D1} and connect it to ***Gnd***. Now disconnect ***C*** from ***Gnd*** and connect it to V_{D2}. Note the resulting d-c output voltage v_{o2}, due to V_{D2} alone.
8. Calculate the minimum and maximum values of the algebraic sum of the three voltages v_{oa}, v_{o1} and v_{o2}, and verify that these values are the same as those of the voltage v_o observed in step **B.4**.
9. Connect a 0.01μF polyester capacitor across R_2 and repeat steps **4**, **5**, **6**, **7** and **8**.